TRUMPower

TMPC-1000

1000W Medical/ITE Grade ATX PC Power Supply

FEATURES

- BF Class Insulation
- Latest 60601-1 & ITE 62368-1 Dual Approvals
- Complies with Intel ATX12V V3.0
- Meets PCIe Gen 5.0
- 5,000 Meters Operating Altitude
- 2kW Peak Power Capability

80 PLUS GOLD

INPUT SPECIFICATIONS

Input Voltage Range ..... 90-264 VAC
Input Frequency 47-63Hz
Input Current ..... 12A max. @ 115 VAC, 60Hz
7A max. @ 230 VAC, 50Hz
Inrush Current ..... 50A @ 115 VAC, 100A @ 230 VAC, at 25˚C cold start
Power Factor ..... 0.95 min. @ 115 VAC, 0.90 min. @ 230 VAC
Earth Leakage Current ..... 400µA max. @ 264V, 63Hz
Touch Current ..... 100µA max. @ 264V, 63Hz

OUTPUT SPECIFICATIONS

Output Power Ratings ..... See Rating Chart
Load Regulation ..... See Rating Chart
Ripple & Noise* ..... See Rating Chart
Line Regulation ..... ±1% max. @ full load
Short Circuit Protection ..... Auto-recovery
Over Current Protection ..... Auto-recovery
Over Temperature Protection ..... Latch off
Over Voltage Protection, +3.3V ..... 3.76-4.8V, Latch off
+5V ..... 5.75-7.0V, Latch off
+12V ..... 13.5-15.5V, Latch off
Temperature Coefficient ..... 0.01%/˚C max.

* Measured with 20MHz bandwidth at rated line voltage and output load ranges, with a 10µF electrolytic capacitor in parallel with a 0.1µF ceramic capacitor across the output.

OUTPUT VOLTAGE & CURRENT RATING CHART

Ouput Voltage	Minimum Load	*Maximum Load	Load Regulation	Ripple & Noise P-P (Max.)
+5V	0A	25A	±5%	50mV
+3.3V	0A	25A	±5%	50mV
+12V	0A	83.3A	±5%	120mV
-12V	0A	0.5A	±10%	120mV
-5V	0A	0.2A	±10%	100mV
+5Vsb	0A	3.5A	±5%	50mV

*The continuous output power is 1,000W maximum.
*The combined load of +5V and +3.3V is 150W maximum.

Peak Power	Time for Peak Power (TE)	Testing Duty Cycle	Time Constant (TC)
1.2KW	100 ms	25%	300 ms
1.6KW	10 ms	12.5%	70 ms
1.8KW	1 ms	8%	11.5 ms
2KW	0.1 ms	5%	1.9 ms

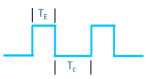

GENERAL SPECIFICATIONS

Efficiency ..... 87% min. @ full load
Turn-On Delay ..... 3 sec. max.
Hold-Up Time ..... 17 ms min. @ 115 VAC, 230 VAC
Withstand Voltage ..... 4,000 VAC, input-output; 2 MOPP
1,500 VAC, input-ground; 1 MOPP
1,500 VAC, output-ground
Operating Altitude ..... 5,000 meters max.
Operating Temperature ..... 0˚C to +50˚C
Storage Temperature ..... -20˚C to +80˚C
Operating Humidity ..... 10% to 85%, non-condensing
Storage Humidity ..... 10% to 95%, non-condensing
Derating ..... Derate from 100% at +50˚C linearly to 50% at +70˚C
MTBF ..... 100K hours minimum at full load, 25˚C ambient, calculated per MIL-HDBK-217F
Dimensions ..... 165 x 150 x 86 mm

STANDARDS & COMPLIANCE

IEC/EN 60601-1-2, Ed. 4.1 ..... EMC & Immunity Performance
EN 55011, EN 55022 ..... Class B, conducted & radiated
FCC, VCCI ..... Class B, conducted & radiated
EN 61000-3-2 ..... Harmonic distortion, Class A & D
EN 61000-3-3 ..... Line fluctuations & flicker
EN 61000-4-2 ..... ESD, ±15 KV air and ±8 KV contact
EN 61000-4-3 ..... Radiated immunity, 9~28 V/m
EN 61000-4-4 ..... Fast transient/burst, ±2 KV
EN 61000-4-5 ..... Surge, ±1 KV diff., ±2 KV com.
EN 61000-4-6 ..... Conducted immunity, 3-6 Vrms
EN 61000-4-8 ..... Magnetic field immunity, 30 A/m
EN 61000-4-11 ..... Voltage dip immunity, 30% reduction for 500ms, 60% reduction for 100ms, >100% reduction for 10ms
Safety Standards ..... UL/IEC/EN 60601-1 (Edition 3.2), ANSI/AAMI ES 60601-1 (2021), CSA C22.2 No. 60601-1 (2022), IEC 62368-1 (3rd Edition)
Agency Approvals ..... UL, cUL, TUV, CB, CE
Other Standards ..... RoHS

Tumbler Technologies + TRUMPower

3350 Scott Blvd., Building 13 • Santa Clara, California 95054, USA • 408-988-6616 • sales@trumpower.com • www.TRUMPower.com

MECHANICAL SPECIFICATIONS

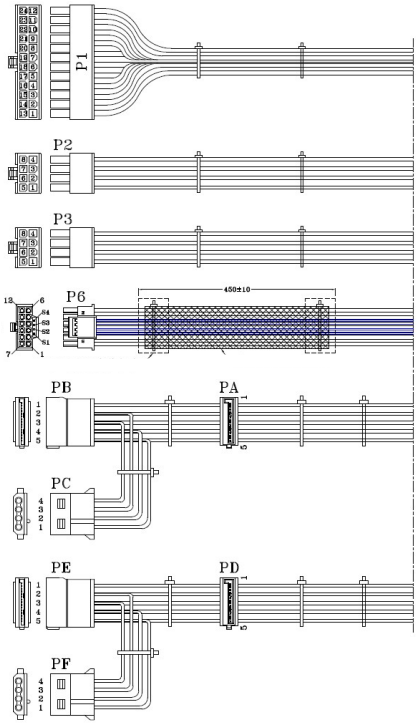

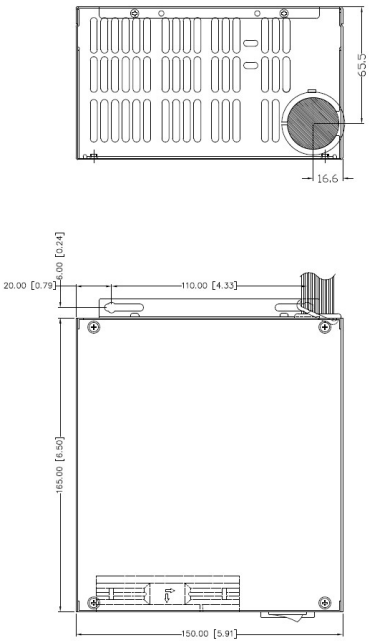

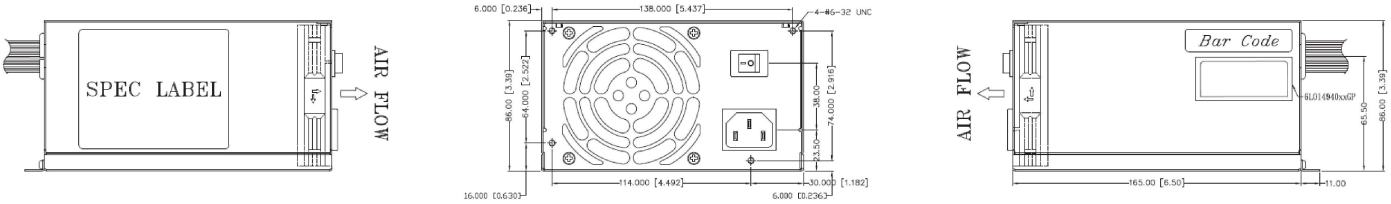

Notes:

1) All dimensions in mm [inches].
2) Weight: 2.4 kgs (5.3 lbs.) approx.
3) The above cable set is for reference only. Customized cable sets are available upon request.

Tumbler Technologies + TRUMPower

3350 Scott Blvd., Building 13 • Santa Clara, California 95054, USA • 408-988-6616 • sales@trumpower.com • www.TRUMPower.com